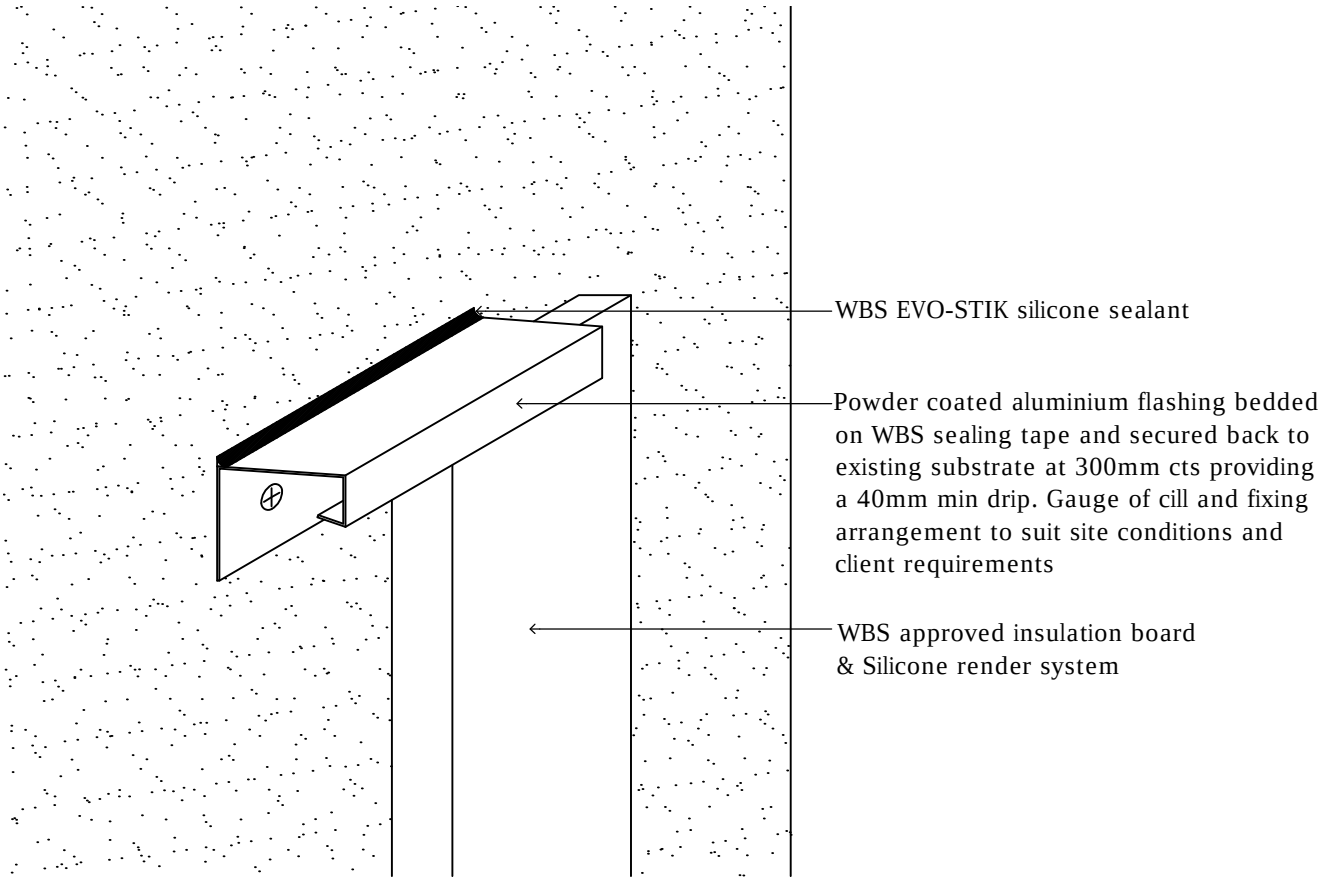

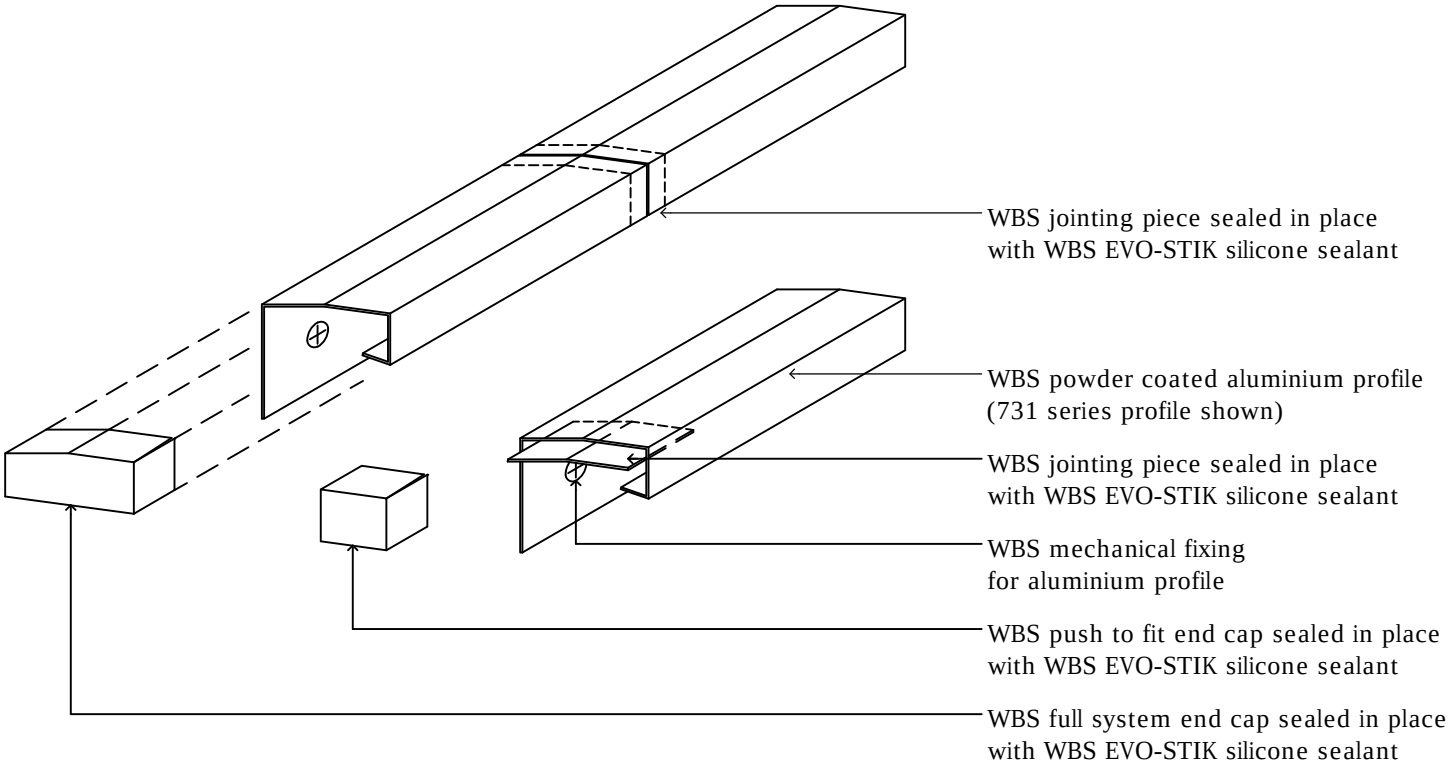

drawing. Trims & flashings detail

date. July 2015 revision. R3 drawn by. RC scale. nts

drawing no. TF-EWI-SILICONE-23

wetherby
creating a greener future
1 Kid Glove Road, Golborne Enterprise Park,
Golborne, Greater Manchester, WA3 3GS
Tel: 01942 717100 Fax: 01942 717101
Web: www.wbs-ltd.co.uk
E-mail: technical@wbs-ltd.co.uk

© WBS-LTD 1998-2014. All rights reserved